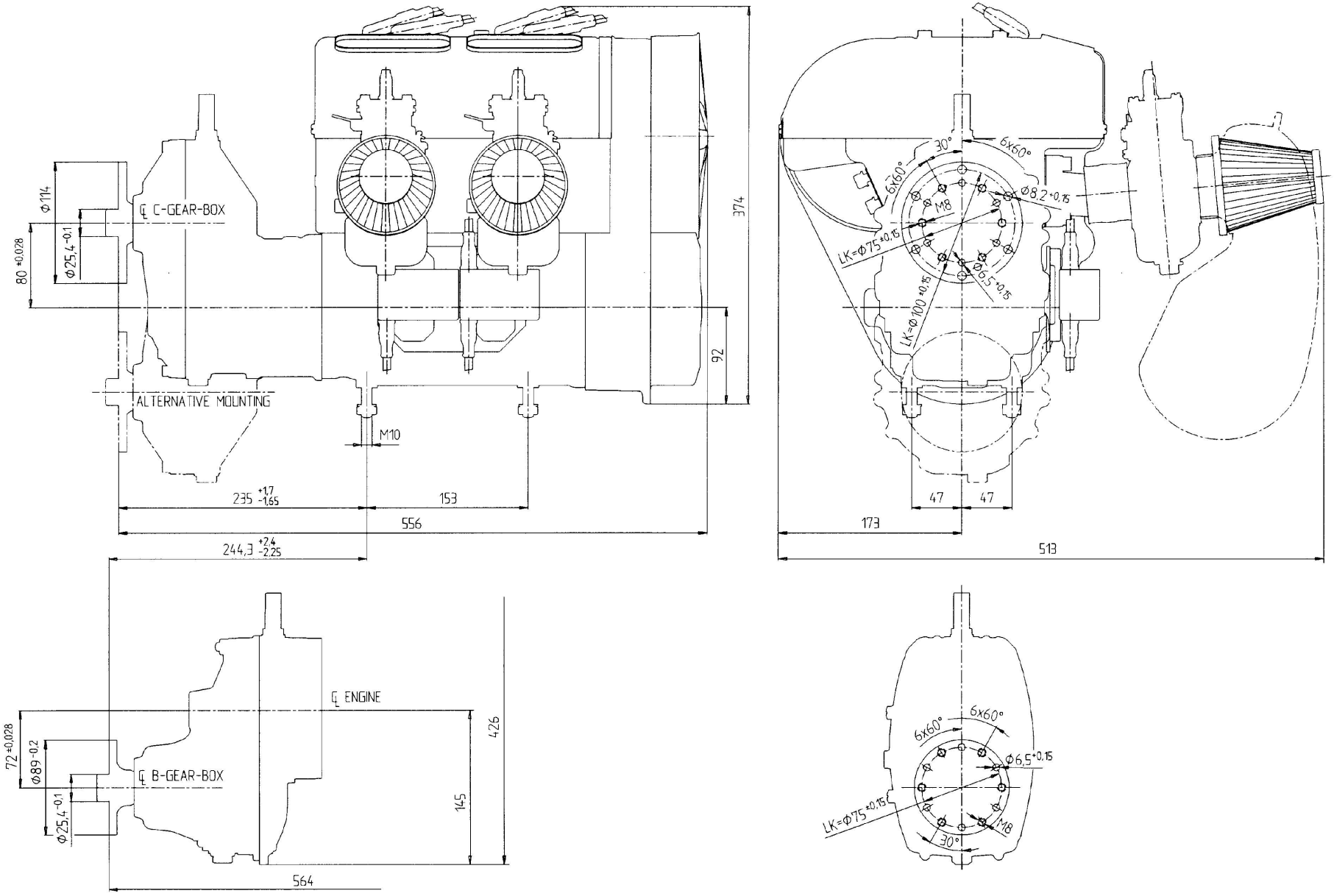

Subject to change without notice. Copyright ROTAX®